# INSTALLATION INSTRUCTIONS

**AUDI A5 5 DOOR** **AU-A5-5-A**

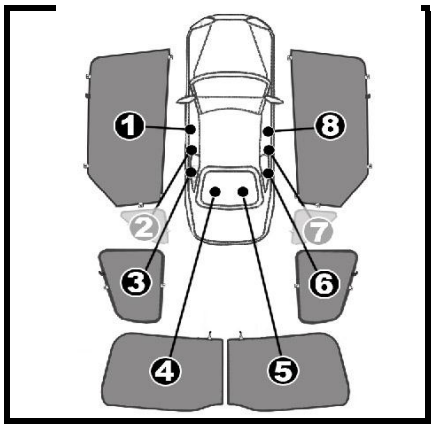


## COMPONENTS INCLUDED

### SHADES

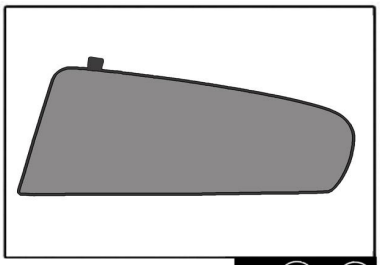

①+⑧

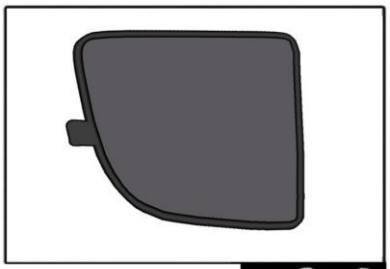

③+⑥

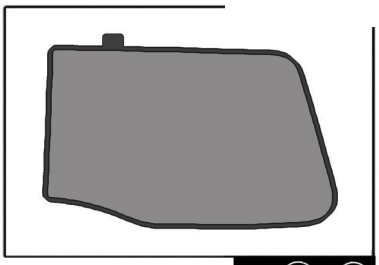

④+⑤

### FIXING CLIPS

CL-M12 x4

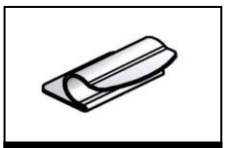

CL-M02 x2

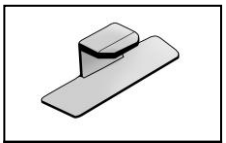

CL-P02 x4

CL-P14 x1

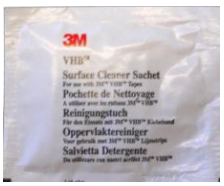

**AUDI A5 5 DOOR** **AU-A5-5-A**

## SIDE SHADE INSTALLATION

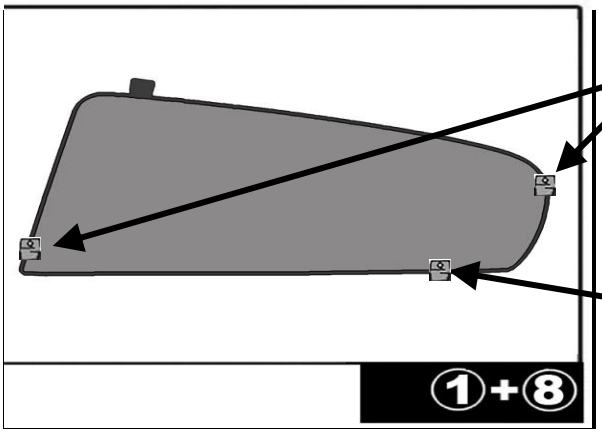


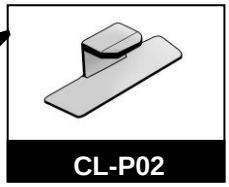

CL-P02

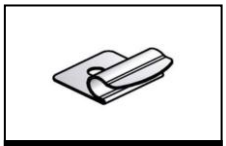

CL-M12

Please ensure the whole surface is wiped before sticking the clips to the trim .

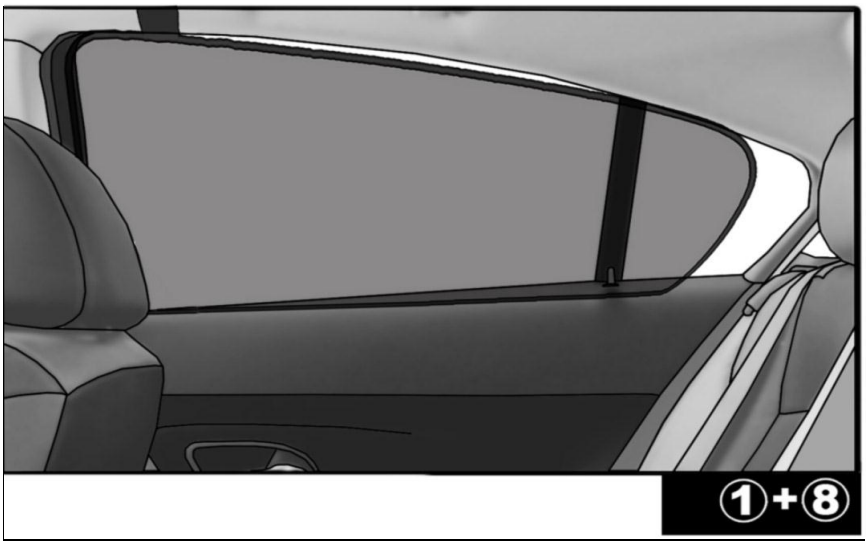

## QUARTER LIGHT SHADE INSTALLATION

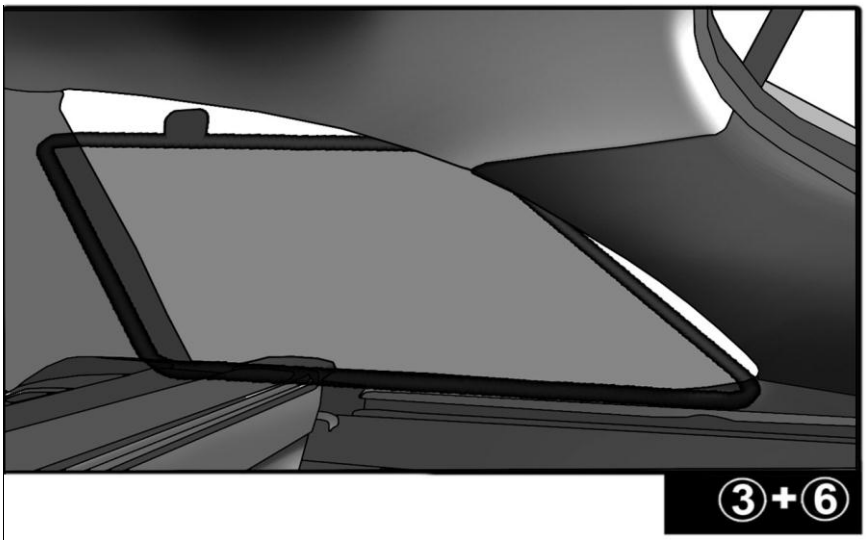


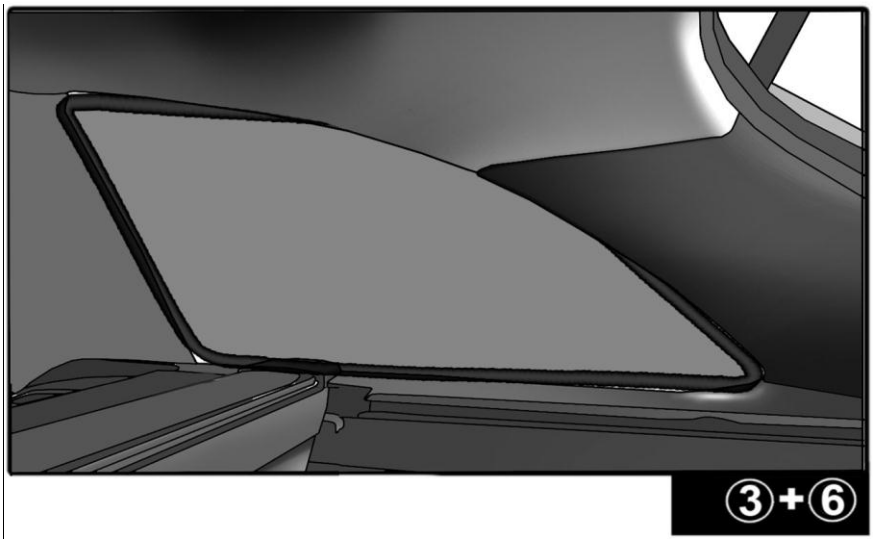

## REAR SHADE INSTALLATION

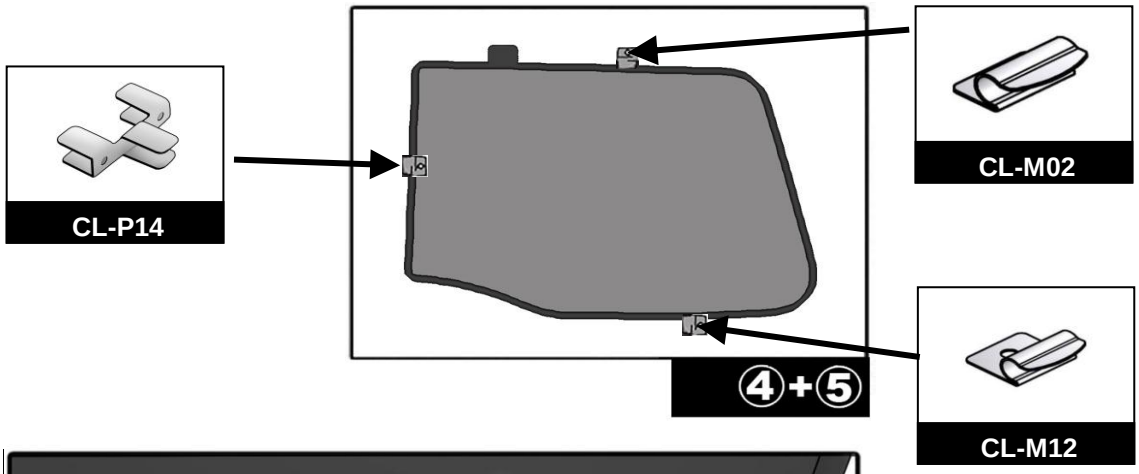


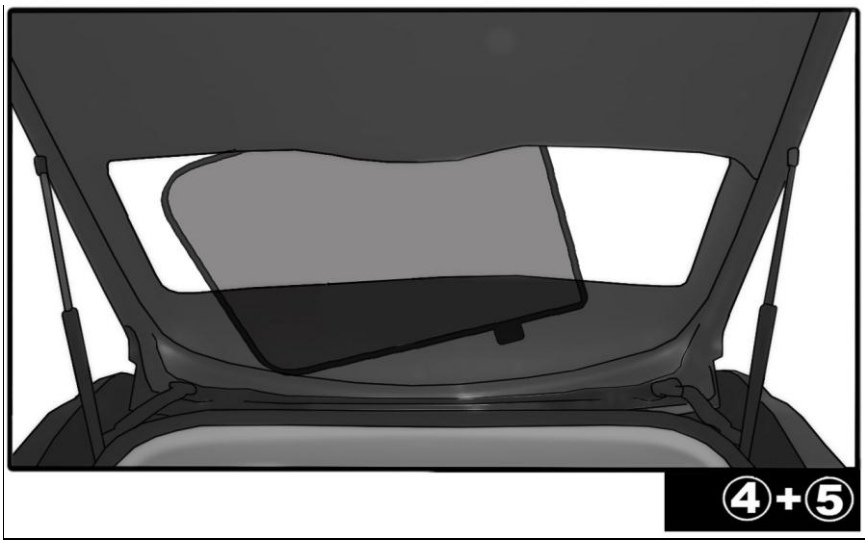


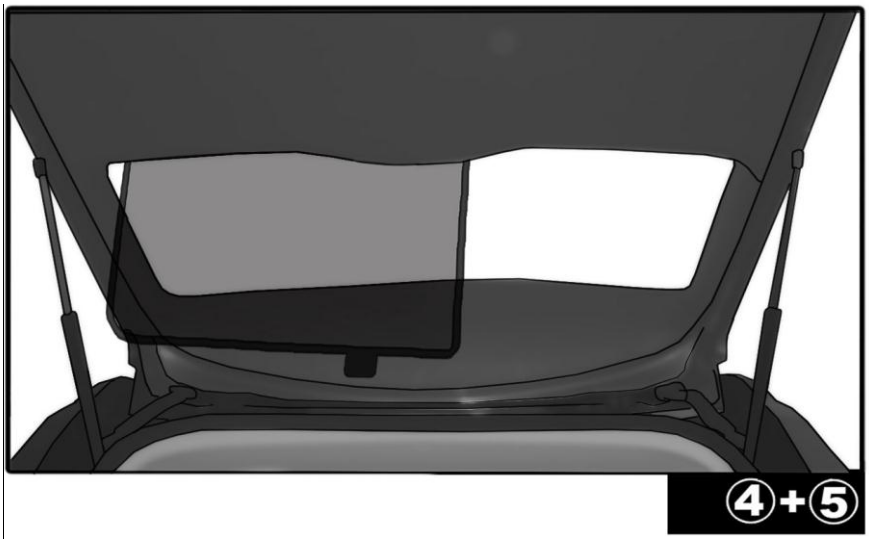

## REAR SHADE INSTALLATION

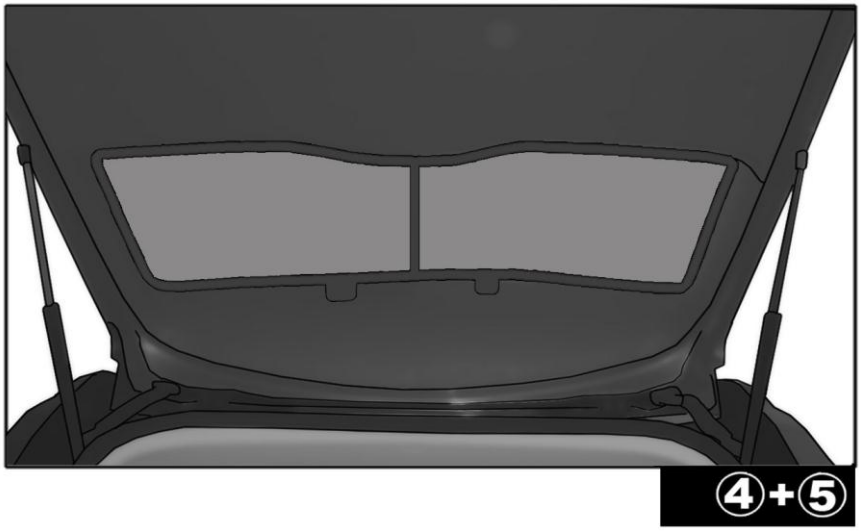


**The pictures shown are for illustration only and do not reflect the actual size of the blinds.**